Map of Revision and Subdivision
CREEKSIDE SUBDIVISION
Pender County, Town of Burgaw, North Carolina

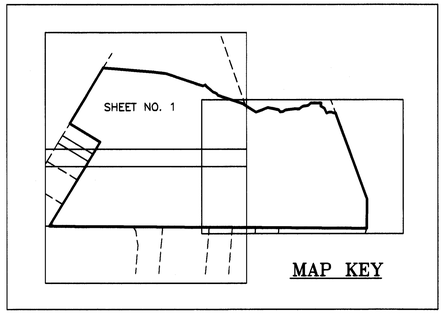

NOTES

THIS SURVEY WAS DONE AUG 2008 BY
STAR SURVEY INC.
702 EDGEFIELD RD. NORTH AUGUSTA, SC 29841
TELEPHONE (803) 613-0377
AND RECORDED IN THE PENDER COUNTY REGISTER OF DEEDS IN MAP BOOK 48 PAGE 77 ON 4 PAGES.

THIS MAP OF REVISION IS NOT MEANT TO MOVE ANY PROPERTY LINES AND IS TO REFLECT A CHANGE IN LOCATION OF THE SIDEWALKS AND ADD AN EASEMENT TO THE TOWN OF BURGAW FOR A SIDEWALK ALONG SOUTH WALKER STREET.
THIS PROPERTY MAY BE SUBJECT TO ANY EASEMENT OR RIGHT-OF-WAY.
#5 REBAR SET AT CORNERS AS NOTED.
RAW ERROR OF CLOSURE IS 1:10,000.
AREA COMPUTED BY COORDINATE METHOD.
SUBJECT TRACT DEED REFRENCE: DB 3885,PG 1.
SURVEY REFRENCES: DB 2798 PG 302
MB 40 PG 81; MB 48 PG 77.

THIS PLAT WAS PREPARED WITHOUT THE BENIFIT OF A TITLE REPORT.
SUBDIVISION TOTAL AREA = 42.254 AC±

REVIEW OFFICER CERTIFICATION

State of North Carolina
County of Pender
Town of Burgaw

I, Rebekah Corbin, Review Officer of Town of Buraw, certify that the map or plat to which this certification is affixed meets all statutory requirements for recording.

Review Officer — Date 12-13-2011

CERTIFICATE OF REGISTRATION
BY THE REGISTER OF DEEDS
STATE OF NORTH CAROLINA
PENDER COUNTY

Parcel Identifier Certificate

Parcel Identifiers have been issued for all of the parcels shown on this plat.

3229-60 8063-0000 & others — TAX OFFICE — 1/19/2012 DATE

Certificate of Approval for Recording

I hereby certify that the subdivision plat shown hereon has been found to comply with the subdivision regulations of the Town of Burgaw, North Carolina, and that this plat has been approved by the board of commissioners for recording in the Office of the Register of Deeds of Pender County.

Howard N. Walker, Jr.
(Town of Burgaw Mayor Pro Tem) — Date 1-3-12

ALL STORM DRAINAGE EASEMENTS SHOWN HEREON ARE 10' EACH SIDE OF INSTALLED PIPE.

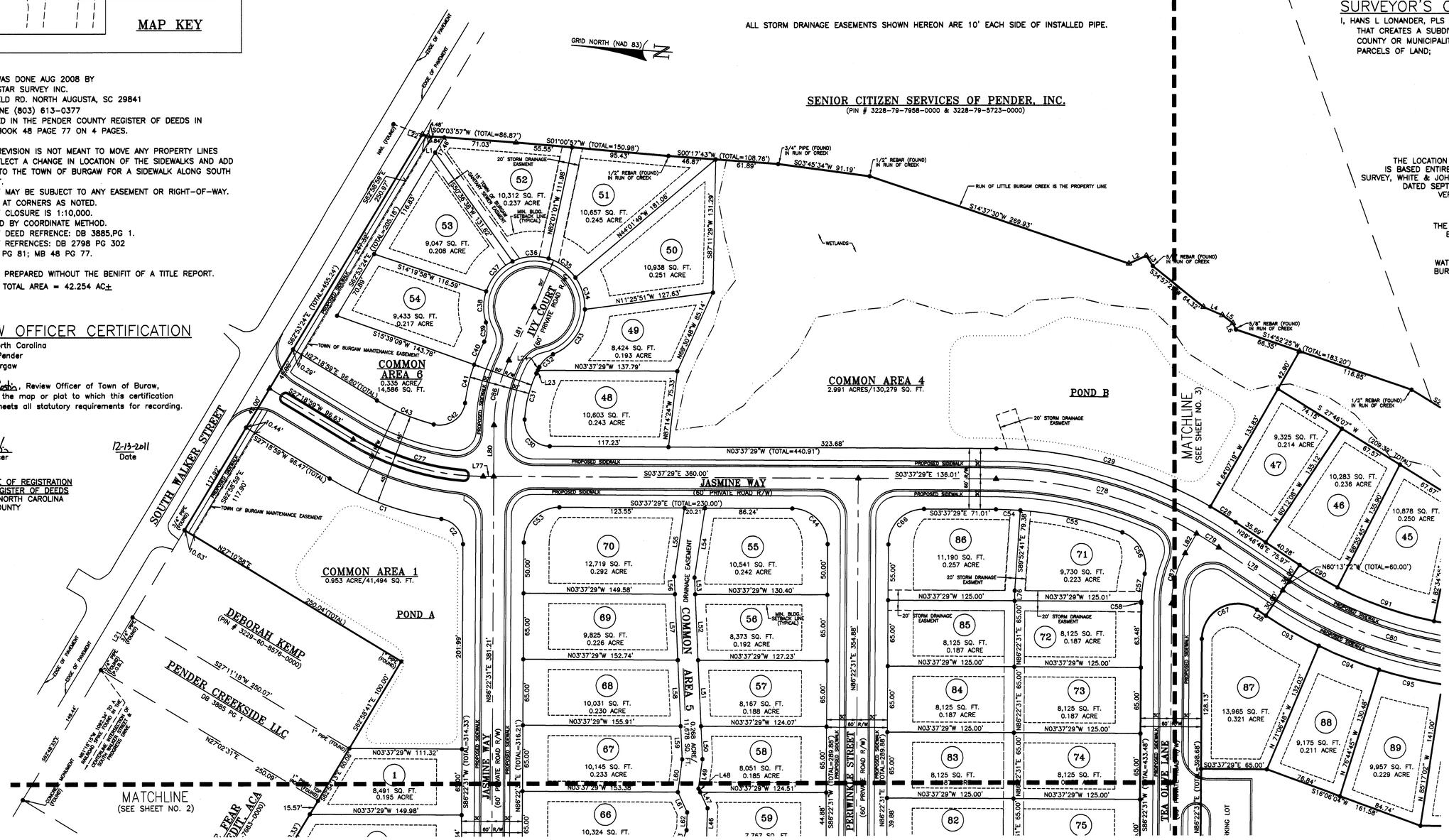

SURVEYOR'S CERTIFICATION

I,Hans L Lonander, certify that this plat was drawn under my supervision from an actual survey made under my supervision (deed description recorded in DB 3885 PG 1; That the boundaries not surveyed are clearly indicated as drawn from information found in MapBook 48, Page 77;That the ratio of precision as calculated is 1:10,000 ; That this plat was prepared inaccordance with G.S. 47-30 as amended. Witness my original signature, registration number and seal this 12th day of DEC , AD., 2011

NORTH CAROLINA PROFESSIONAL SEAL L-4736 LAND SURVEYOR HANS L. LONANDER

Hans L Lonander, PLS
L-4736

SURVEYOR'S CERTIFICATION

I, HANS L LONANDER, PLS CERTIFY THAT THIS PLAT IS A SURVEY THAT CREATES A SUBDIVISION OF LAND WITHIN THE AREA OF A COUNTY OR MUNICIPALITY THAT HAS AN ORDINANCE THAT REGULATES PARCELS OF LAND;

HANS L LONANDER, PLS
L-4736 NORTH CAROLINA

THE LOCATION OF THE WELANDS AREA AS SHOWN HEREON IS BASED ENTIRELY ON INFORMATION OBTAINEDFROM WETLANDS SURVEY, WHITE & JOHANSON TRACTS, BY HANOVER DESIGN SERVICES, P.A. DATED SEPTEMBER 20,2005, AND HAS NOT BEEN FIELD VERIFIED BY THE STAR SURVEY, INC

THE SUBJECT PROPERTY IS NOT WITHIN 2000' OF AN EXISTING USGS OR NCGS CONTROL MONUMENT.

WATER AND SANITARY SEWER DEDICATED TO TOWN OF BURGAW AND TO BE PROVIDED BY TOWN OF BURGAW. OTHER UTILITIES NOT SHOWN.

ALL STREETS AND SIDEWALKS ARE PRIVATE.

ALL SORMWATER RETENTION PONDS AND EASEMENTS ARE PRIVATE.

NO LINES ON THIS MAP WERE SURVEYED DRAWN FROM MB 48 PG 77

SEE SHEET 4 OF 4 FOR NOTES, REFERENCES, SETBACK REQUIREMENTS, LEGEND AND CURVE AND LINE TABLES

Owners: PENDER CREEKSIDE, LLC,
6740 Netherlands Drive,
Wilmington NC, 28403

REVISION DATE: NOV 11, 2011
REVISION DATE: AUG 1, 2011
REVISION DATE: MAY 24, 2011

DATE: AUGUST 18, 2008
PROJ. # 306038180
SURVEY:# 06030201A636-A
SCALE: 1" = 50'

JF Johnson Surveying
201A S.Wright St.
BURGAW, NC
910-259-2005
Firm License # P-0414

SHEET 1 OF 4

SCALE: 1"=50'
0' 25' 50' 100'

I (we) hereby certify that I am (we are) the owner(s) of the property shown and described hereon, Which is located in the subdivision jurisdiction of the Town of Burgaw and that I (we) hereby adopt this plan of subdivision with my (our) free consent, establish minimum building setback lines, and dedicate all streets, alleys, walks, parks, open space, and other sites and easements to public or private use as noted. furthermore, I (we) hereby dedicate all sanitary sewer, storm sewer, and water lines to the Town of Burgaw.

Owner — Date 1-5-12

B0053 P0041 01-19-2012 11:03:24.000
Faye Teachey Prevatte PLR1
Pender County, NC Register of Deeds page 1 of 4

Parcel Identifier Certificate

Parcel Identifiers have been issued for all of the parcels shown on this plat.

3229-60-8063-0000 & others — TAX OFFICE — AE

1/19/2012 — DATE

Map of Revision and Subdivision
CREEKSIDE SUBDIVISION
Pender County, Town of Burgaw, North Carolina

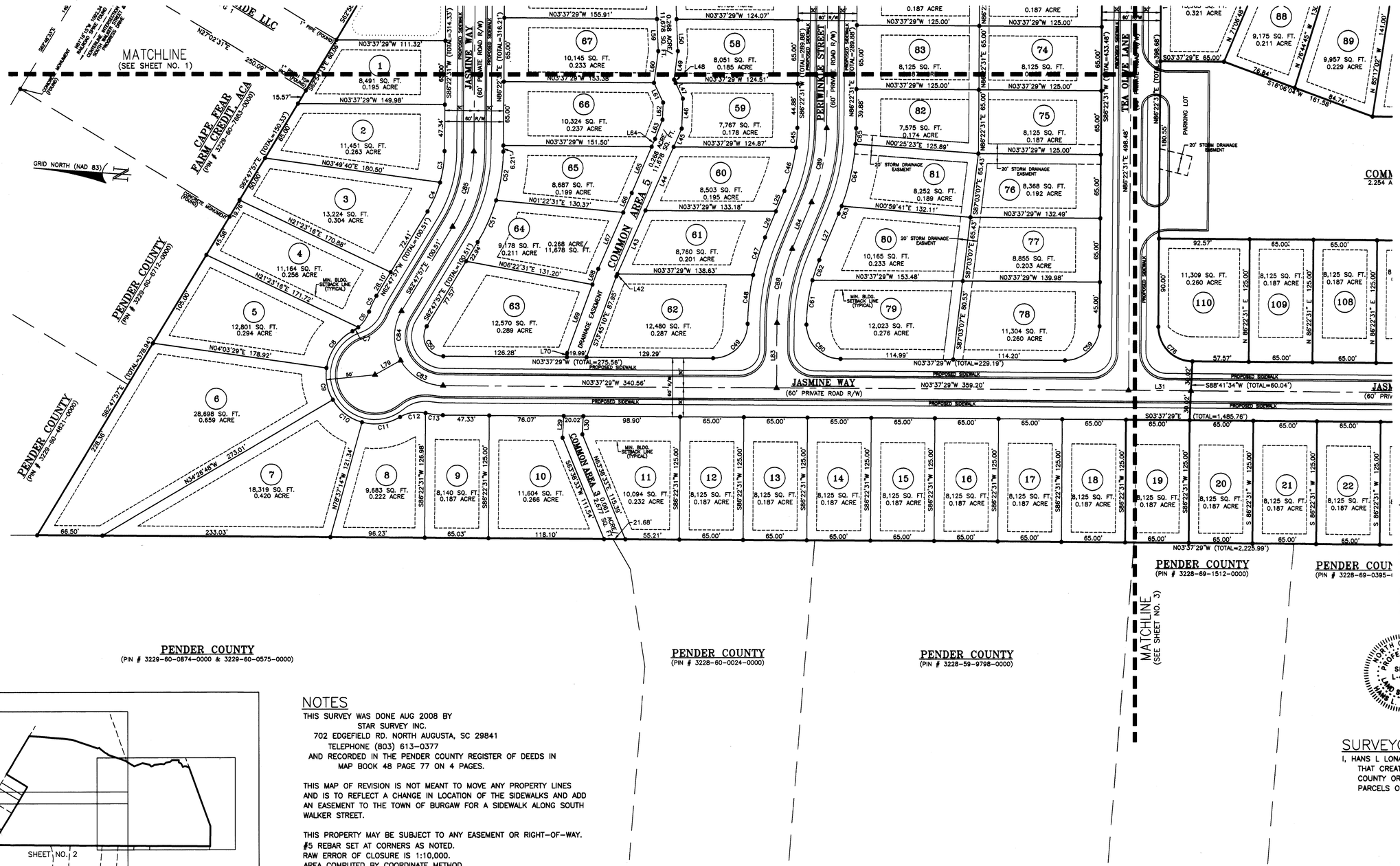

REVIEW OFFICER CERTIFICATION

State of North Carolina
County of Pender
Town of Burgaw

I, Rebekah Costin, Review Officer of Town of Buraw, certify that the map or plat to which this certification is affixed meets all statutory requirements for recording.

Rebekah Costin — Review Officer — 12-13-2011 Date

CERTIFICATE OF REGISTRATION BY THE REGISTER OF DEEDS
STATE OF NORTH CAROLINA
PENDER COUNTY

SURVEYOR'S CERTIFICATION

I,Hans L Lonander, certify that this plat was drawn under my supervision from an actual survey made under my supervision (deed description recorded in DB 3885 PG 1; That the boundaries not surveyed are clearly indicated as drawn from information found in MapBook 48, Page 77;That the ratio of precision as calculated is 1:10,000 ; That this plat was prepared inaccordance with G.S. 47-30 as amended. Witness my original signature, registration number and seal this 12th day of Dec , AD., 2011

NORTH CAROLINA PROFESSIONAL SEAL L-4736 LAND SURVEYOR HANS L. LONANDER

Hans L Lonander, PLS L-4736

SURVEYOR'S CERTIFICATION

I, HANS L LONANDER, PLS CERTIFY THAT THIS PLAT IS A SURVEY THAT CREATES A SUBDIVISION OF LAND WITHIN THE AREA OF A COUNTY OR MUNICIPALITY THAT HAS AN ORDINANCE THAT REGULATES PARCELS OF LAND;

HANS L LONANDER, PLS
L-4736 NORTH CAROLINA

Owners: **PENDER CREEKSIDE, LLC,**
6740 Netherlands Drive,
Wilmington NC, 28403

SEE SHEET 4 OF 4 FOR NOTES, REFERENCES, SETBACK REQUIREMENTS, LEGEND AND CURVE AND LINE TABLES

REVISION DATE: NOV 11, 2011
REVISION DATE: AUG 1, 2011
REVISION DATE: MAY 24, 2011

DATE: AUGUST 18, 2008
PROJ. # 306038180
SURVEY:# 06030201A636-A
SCALE: 1" = 50'

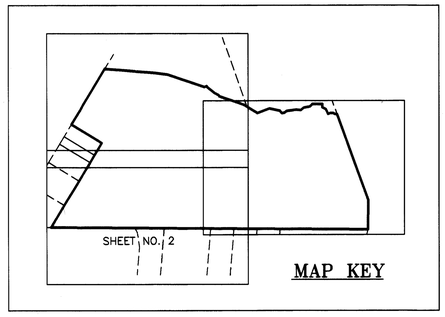

NOTES

THIS SURVEY WAS DONE AUG 2008 BY
STAR SURVEY INC.
702 EDGEFIELD RD. NORTH AUGUSTA, SC 29841
TELEPHONE (803) 613-0377
AND RECORDED IN THE PENDER COUNTY REGISTER OF DEEDS IN MAP BOOK 48 PAGE 77 ON 4 PAGES.

THIS MAP OF REVISION IS NOT MEANT TO MOVE ANY PROPERTY LINES AND IS TO REFLECT A CHANGE IN LOCATION OF THE SIDEWALKS AND ADD AN EASEMENT TO THE TOWN OF BURGAW FOR A SIDEWALK ALONG SOUTH WALKER STREET.

THIS PROPERTY MAY BE SUBJECT TO ANY EASEMENT OR RIGHT-OF-WAY.
#5 REBAR SET AT CORNERS AS NOTED.
RAW ERROR OF CLOSURE IS 1:10,000.
AREA COMPUTED BY COORDINATE METHOD.
SUBJECT TRACT DEED REFRENCE: DB 3885,PG 1; DB 2798 PG 302; MB 40 PG 81; MB 48 PG 77.

THIS PLAT WAS PREPARED WITHOUT THE BENIFIT OF A TITLE REPORT.

SUBDIVISION TOTAL AREA = 42.254 AC±

Certificate of Approval for Recording

I hereby certify that the subdivision plat shown hereon has been found to comply with the subdivision regulations of the Town of Burgaw, North Carolina, and that this plat has been approved by the board of Commissioners for recording in the Office of the Register of Deeds of Pender County.

Howard N. Walker, Jr. — (Town of Burgaw Mayor Pro Tem) — 1-3-12 Date

I (we) hereby certify that I am (we are) the owner(s) of the property shown and described hereon, Which is located in the subdivision jurisdiction of the Town of Burgaw and that I (we) hereby adopt this plan of subdivision with my (our) free consent, establish minimum building setback lines, and dedicate all streets, alleys, walks, parks, open space, and other sites and easements to public or private use as noted. furthermore, I (we) hereby dedicate all sanitary sewer, storm sewer, and water lines to the Town of Burgaw.

Owner — 1-5-12 Date

JF Johnson Surveying
201A S.Wright St.
BURGAW, NC
910-259-2005
Firm License # P-0414

B0053 P0042 01-19-2012 11:03:24.000 Faye Teachey Privatte PLR1
Pender County, NC Register of Deeds page 2 of 4

SHEET 2 OF 4

SCALE: 1"=50'
0' 25' 50' 100'

MB 53 PG 42 2 of 4

Parcel Identifier Certificate

Parcel Identifiers have been issued for all of the parcels shown on this plat.

3229-60-8063-0000 & others — TAX OFFICE — AC

1/19/2012 — DATE

Map of Revision and Subdivision
CREEKSIDE SUBDIVISION
Pender County, Town of Burgaw, North Carolina

CERTIFICATE OF REGISTRATION BY THE REGISTER OF DEEDS
STATE OF NORTH CAROLINA
PENDER COUNTY

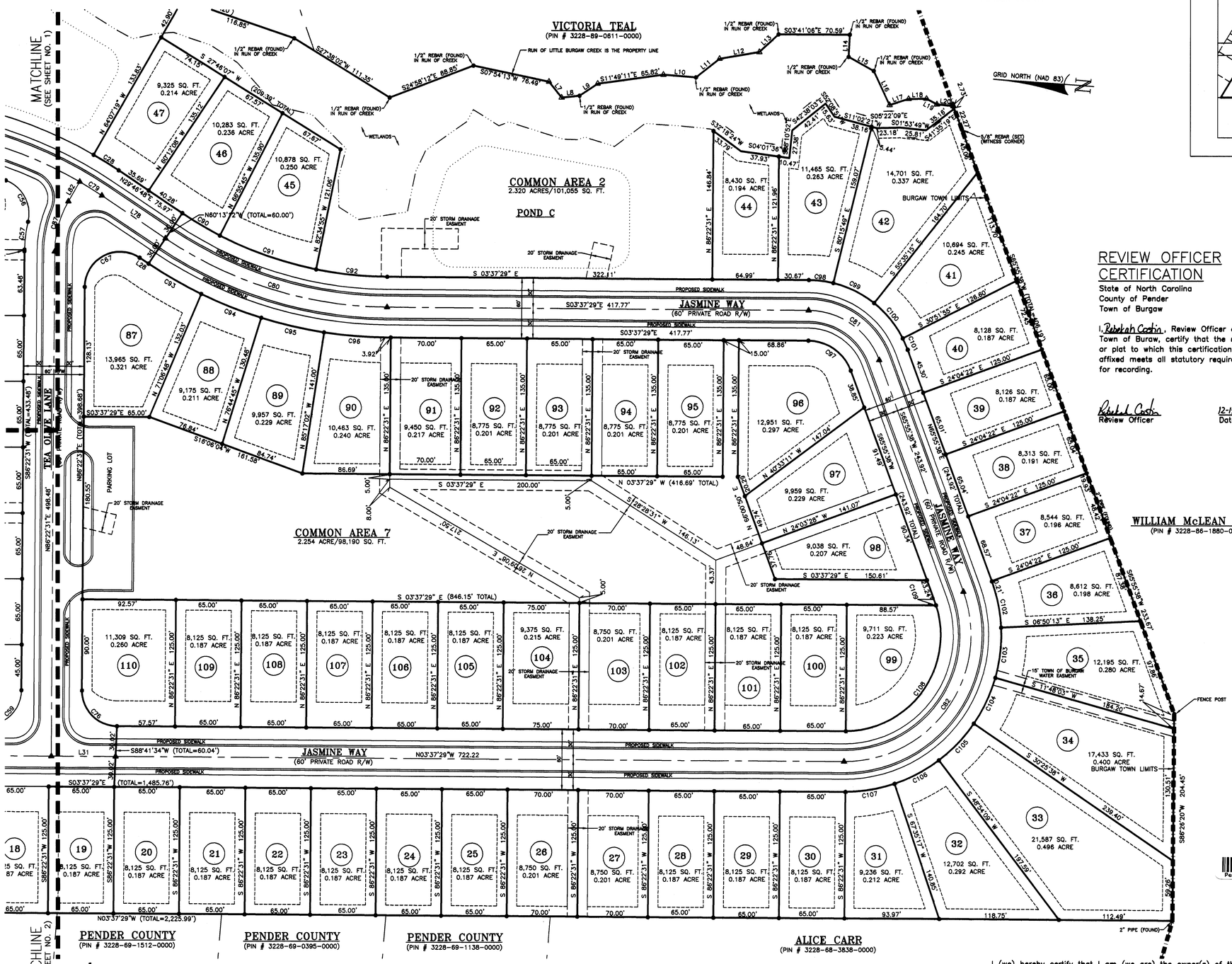

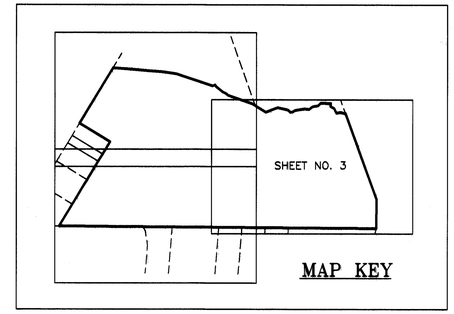

NOTES

THE SURVEY OF SHEET 3 WAS DONE JULY, 2011
BY J.F. JOHNSON SURVEYING PLLC
AND WAS A SURVEY OF EXISTING PROPERTY CORNERS
SET BY STAR SURVEYING AND MATCHES THE PROPOSED SUBDIVISION
MAP SUBMITTED TO THE TOWN.
THIS PROPERTY MAY BE SUBJECT TO ANY EASEMENT OR RIGHT-OF-WAY.
#5 REBAR SET AT CORNERS AS NOTED.
RAW ERROR OF CLOSURE IS 1:10,000.
AREA COMPUTED BY COORDINATE METHOD.
SUBJECT TRACT DEED REFRENCE: DB 3885,PG 1; DB 2798 PG 302;
MB 48 PG 77; MB 40 PG 81.

THIS PLAT WAS PREPARED WITHOUT THE BENIFIT OF A TITLE REPORT.

SUBDIVISION TOTAL AREA = 42.254 AC±

REVIEW OFFICER CERTIFICATION

State of North Carolina
County of Pender
Town of Burgaw

I, Rebekah Costin, Review Officer of Town of Buraw, certify that the map or plat to which this certification is affixed meets all statutory requirements for recording.

Rebekah Costin — Review Officer
12-13-2011 — Date

SURVEYOR'S CERTIFICATION

I,Hans L Lonander, certify that this plat was drawn under my supervision from an actual survey made under my supervision (deed description recorded in DB 3885 PG 1; That the boundaries not surveyed are clearly indicated as drawn from information found in MapBook 48, Page 77;That the ratio of precision as calculated is 1:10,000 ; That this plat was prepared inaccordance with G.S. 47-30 as amended. Witness my original signature, registration number and seal this 12th day of Dec, AD., 2011

NORTH CAROLINA PROFESSIONAL SEAL L-4736 LAND SURVEYOR HANS L. LONANDER

Hans L Lonander, PLS
L-4736

SURVEYOR'S CERTIFICATION

I, HANS L LONANDER, PLS CERTIFY THAT THIS PLAT IS A SURVEY THAT CREATES A SUBDIVISION OF LAND WITHIN THE AREA OF A COUNTY OR MUNICIPALITY THAT HAS AN ORDINANCE THAT REGULATES PARCELS OF LAND;

HANS L LONANDER, PLS
L-4736 NORTH CAROLINA

B2053 P0043 01-19-2012 11:03:24.000
Pender County, NC Register of Deeds page 3 of 4
Faye Teachey Prevatte PLR1

Owners: PENDER CREEKSIDE, LLC,
6740 Netherlands Drive,
Wilmington NC, 28403

SEE SHEET 4 OF 4 FOR NOTES, REFERENCES, SETBACK REQUIREMENTS, LEGEND AND CURVE AND LINE TABLES
REVISION DATE: NOV 11, 2011
REVISION DATE: AUG 1, 2011
REVISION DATE: MAY 24, 2011

DATE: AUGUST 18, 2008
PROJ. # 306038180
SURVEY:# 06030201A636-A
SCALE: 1" = 50'

JF Johnson Surveying
201A S.Wright St.
BURGAW, NC
910-259-2005
Firm License # P-0414

SHEET 3 OF 4

SCALE: 1"=50'
0' 25' 50' 100'

Certificate of Approval for Recording

I hereby certify that the subdivision plat shown hereon has been found to comply with the subdivision regulations of the Town of Burgaw, North Carolina, and that this plat has been approved by the board of commissioners for recording in the Office of the Register of Deeds of Pender County.

Howard N. Walker, Jr.
(Town of Burgaw Mayor Pro Tem)
1-3-12 — Date

I (we) hereby certify that I am (we are) the owner(s) of the property shown and described hereon, Which is located in the subdivision jurisdiction of the Town of Burgaw and that I (we) hereby adopt this plan of subdivision with my (our) free consent, establish minimum building setback lines, and dedicate all streets, alleys, walks, parks, open space, and other sites and easements to public or private use as noted. furthermore, I (we) hereby dedicate all sanitary sewer, storm sewer, and water lines to the Town of Burgaw.

Owner
1-5-12 — Date

MB 53 PG 43 3 of 4

Map of Revision and Subdivision
CREEKSIDE SUBDIVISION
Pender County, Town of Burgaw, North Carolina

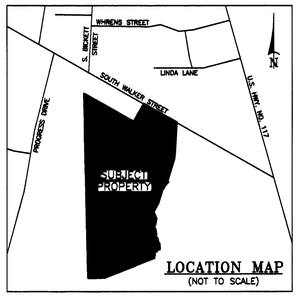

LOCATION MAP
(NOT TO SCALE)

WATER & SANITARY SEWER
WATER AND SANITARY SEWER MAINTENANCE AND REPAIR TO BE PROVIDED BY TOWN OF BURGAW UPON DEDICATION OF INFRASTRUCTURE.

UTILITIES
OTHER IMPROVMENTS AND UTILITIES NOT SHOWN.

STREETS AND SIDEWALKS
ALL STREETS AND SIDEWALKS IN THE SUBDIVISION SHALL BE PRIVATE.
SIDEWALK ALONG WALKER ST. R.O.W. IS TO BE INSTALLED BY THE DEVELOPER.

STORMWATER PONDS AND EASEMENTS
ALL STORM WATER RETENTION PONDS AND EASEMENTS ARE PRIVATE.

STORM WATER PERMIT
PERMIT # SW8_070907 ISSUED= 12/7/07

DOT DRIVEWAY PERMIT
PERMIT # P-0953 ISSUED= 4/30/08

LEGEND

SETBACK LINES
SURVEYED PROPERTY LINES
PROPERTY LINES NOT SURVEYED (TAKEN FROM MB 48 PG 77)
WETLAND LINE
STORM WATER EASEMENT
SANITARY SEWER EASEMENT
WATER EASEMENT
EXISTING IRON
POINT IN CREEK
NAIL IN PAVEMENT

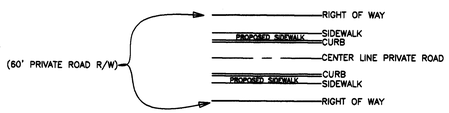

LINE TABLE

LINE	BEARING	DISTANCE	LINE	BEARING	DISTANCE
L1	S12°14'27"W	6.10'	L43	S70°07'29"E	70.88'
L2	S28°18'21"E	18.75'	L44	S70°07'29"E	70.88'
L3	S53°16'10"W	11.93'	L45	S70°07'29"E	20.33'
L4	S19°27'46"W	20.23'	L46	N88°00'51"E	30.59'
L5	S32°44'40"W	13.17'	L47	N61°10'10"E	17.44'
L6	S61°11'17"W	6.80'	L48	N61°10'10"E	3.89'
L7	S47°25'22"W	20.10'	L49	S86°22'13"E	29.18'
L8	S09°53'44"E	17.81'	L50	N83°35'19"E	32.57'
L9	S37°46'20"E	21.69'	L51	N83°35'19"E	65.08'
L10	S00°43'31"W	32.37'	L52	N83°35'19"E	65.08'
L11	S42°14'44"E	28.80'	L53	N83°35'19"E	16.43'
L12	S13°30'22"E	39.94'	L54	S85°22'08"E	68.31'
L13	S46°49'59"E	25.89'	L55	N85°22'08"W	68.34'
L14	S89°06'31"W	22.07'	L56	S83°35'19"W	17.39'
L15	S25°18'17"W	28.51'	L57	S83°35'19"W	65.08'
L16	S60°55'34"W	37.19'	L58	S83°35'19"W	65.08'
L17	S22°01'16"E	19.76'	L59	S83°35'19"W	32.71'
L18	S04°36'44"E	17.76'	L60	N86°22'13"W	32.59'
L19	S24°28'51"W	11.79'	L61	S61°10'10"W	22.08'
L20	S01°41'27"W	16.41'	L62	S88°00'51"W	17.52'
L21	S62°53'11"E	60.70'	L63	N72°50'33"W	20.88'
L22	S15°30'59"W	30.40'	L64	N70°45'28"W	8.67'
L23	S68°23'00"E	3.43'	L65	N70°45'28"W	51.39'
L24	S68°23'00"E	3.62'	L66	N70°07'29"W	21.69'
L25	N71°22'22"W	22.42'	L67	N70°07'29"W	62.87'
L26	N71°22'22"W	28.84'	L68	N73°45'10"W	17.05'
L27	S71°22'22"E	51.25'	L69	N73°45'10"W	74.45'
L28	S29°46'48"W	10.62	L70	S89°07'40"W	4.07'
L29	S89°07'40"W	22.15'	L71	INTENTIONALLY	OMITTED
L30	N89°07'40"E	18.59'	L72	INTENTIONALLY	OMITTED
L31	N03°37'29"W	63.79'	L73	INTENTIONALLY	OMITTED
L32	INTENTIONALLY	OMITTED	L74	INTENTIONALLY	OMITTED
L33	INTENTIONALLY	OMITTED	L75	INTENTIONALLY	OMITTED
L34	INTENTIONALLY	OMITTED	L76	N86°22'31"E	10.00'
L35	INTENTIONALLY	OMITTED	L77	S03°37'29"E	10.42'
L36	INTENTIONALLY	OMITTED	L78	S29°46'48"W	75.97'
L37	INTENTIONALLY	OMITTED	L79	N33°12'43"W	30.00'
L38	INTENTIONALLY	OMITTED	L80	N86°22'31"E	50.59'
L39	INTENTIONALLY	OMITTED	L81	S68°23'00"E	58.04'
L40	INTENTIONALLY	OMITTED	L82	S63°55'18"E	22.34'
L41	INTENTIONALLY	OMITTED	L83	N86°22'31"E	66.22'
L42	S70°07'29"E	2.49'	L84	S71°22'22"E	51.25'

CURVE TABLE

CURVE	DELTA ANGLE	CHORD BEARING	RADIUS	ARC LENGTH	CHORD DISTANCE
C1	22°55'56"	S15°51'01"W	295.00'	118.07'	117.28'
C2	81°59'28"	S45°22'47"W	25.00'	35.78'	32.80'
C3	15°24'46"	N85°55'06"W	120.00'	32.28'	32.18'
C4	15°24'46"	N70°30'20"W	120.00'	32.28'	32.18'
C5	12°46'57"	N69°11'26"W	80.00'	17.85'	17.81'
C6	32°19'09"	N59°25'20"W	35.00'	19.74'	19.48'
C7	11°44'10"	N37°23'41"W	35.00'	7.17'	7.16'
C8	54°24'56"	N58°44'03"W	50.00'	47.49'	45.72'
C9	38°30'17"	S74°48'20"W	50.00'	33.60'	32.97'
C10	44°10'26"	S33°27'59"W	50.00'	38.55'	37.60'
C11	46°16'37"	S11°45'32"E	50.00'	40.38'	39.30'
C12	44°03'19"	S12°52'11"E	35.00'	26.91'	26.25'
C13	12°46'57"	S02°46'00"W	80.00'	17.85'	17.81'
C28	03°54'07"	N27°49'44"E	430.00'	29.28'	29.28'
C29	29°30'09"	N11°07'36"E	430.00'	221.41'	218.98'
C30	92°39'44"	N42°42'23"E	25.00'	40.43'	36.17'
C31	22°34'45"	S79°40'22"E	120.00'	47.29'	46.98'
C32	42°50'00"	S46°58'00"E	25.00'	18.69'	18.26'
C33	65°59'45"	S58°32'52"E	50.00'	57.59'	54.46'
C34	38°08'42"	N69°22'54"E	50.00'	33.29'	32.68'
C35	37°49'20"	N31°23'53"E	50.00'	33.01'	32.41'
C36	42°00'38"	N08°31'06"W	50.00'	36.66'	35.85'
C37	46°08'38"	N52°35'44"W	50.00'	40.27'	39.19'
C38	35°40'50"	S86°29'32"W	50.00'	31.14'	30.64'
C39	44°54'03"	N88°53'52"W	25.00'	19.59'	19.09'
C40	07°54'01"	N70°23'51"W	180.00'	24.82'	24.80'
C41	12°22'18"	N80°32'00"W	180.00'	38.87'	38.79'
C42	96°56'50"	N38°14'44"W	25.00'	42.30'	37.43'
C43	17°05'17"	N18°46'20"E	205.00'	61.14'	60.91'
C44	90°00'00"	S41°22'31"W	35.00'	54.98'	49.50'
C45	08°47'51"	S89°46'27"W	170.00'	20.17'	20.16'
C46	15°27'18"	N79°06'00"W	170.00'	45.85'	45.72'
C47	10°00'22"	N76°22'33"W	230.00'	40.17'	40.12'
C48	12°30'31"	N87°38'00"W	230.00'	50.21'	50.11'
C49	90°15'46"	N48°45'22"W	35.00'	55.14'	49.61'
C50	120°49'32"	N56°47'17"E	20.00'	42.18'	34.78'
C51	14°48'25"	S70°12'10"E	180.00'	46.52'	46.39'
C52	18°01'07"	S85°36'55"E	180.00'	50.32'	50.16'
C53	90°00'00"	S48°37'29"E	35.00'	54.98'	49.50'
C54	03°44'48"	S01°45'05"E	370.00'	24.19'	24.19'
C55	15°59'40"	S08°07'09"W	370.00'	103.29'	102.95'
C56	83°09'22"	S57°41'40"W	35.00'	50.80'	46.45'
C57	12°13'43"	N86°50'30"W	130.00'	27.75'	27.69'
C58	00°40'07"	S86°42'35"W	130.00'	1.52'	1.52'
C59	90°00'00"	N48°37'29"W	35.00'	54.98'	49.50'
C60	89°29'02"	N41°07'02"E	35.00'	54.66'	49.27'
C61	15°26'28"	S86°25'13"E	170.00'	45.81'	45.68'
C62	07°19'37"	S75°02'10"E	170.00'	21.74'	21.72'
C63	02°02'06"	S72°23'25"E	230.00'	8.17'	8.17'
C64	16°10'09"	S81°29'32"E	230.00'	64.91'	64.69'
C65	04°02'52"	N88°23'57"E	230.00'	16.25'	16.25'
C66	90°00'00"	S48°37'29"E	35.00'	54.98'	49.50'
C67	123°24'16"	S31°55'21"E	35.00'	75.38'	61.63'
C76	90°00'00"	N41°22'31"E	35.00'	54.98'	49.50'
C77	30°56'28"	S11°50'45"W	250.00'	135.01'	133.37'
C78	29°42'11"	S11°13'37"W	400.00'	207.37'	205.05'
C79	03°42'05"	S27°55'45"W	400.00'	25.84'	25.84'
C80	33°24'16"	S13°04'39"W	400.00'	233.21'	229.92'
C81	69°33'07"	S31°09'05"W	75.00'	91.04'	85.56'
C82	110°26'53"	N58°50'55"W	125.00'	240.96'	205.35'
C83	60°24'46"	N26°34'54"E	50.00'	52.72'	50.31'
C84	60°24'46"	N86°59'40"E	50.00'	52.72'	50.31'
C85	30°49'32"	S78°12'43"E	150.00'	80.70'	79.73'
C86	25°14'29"	S81°00'14"E	150.00'	66.08'	65.55'
C87	29°42'11"	S78°46'23"E	100.00'	51.84'	51.26'
C88	22°15'07"	S82°29'55"E	200.00'	77.67'	77.19'
C89	22°15'07"	S82°29'55"E	200.00'	77.67'	77.19'
C90	6°42'02"	S26°25'46"W	370.00	43.27	43.25
C91	15°41'47"	S15°13'52"W	370.00	101.36	101.05
C92	11°00'27"	S01°52'45"W	370.00	71.08	70.97
C93	8°01'23"	S25°46'06"W	430.00	60.21	60.16
C94	8°31'49"	S17°29'30"W	430.00	64.02	63.96
C95	8°30'59"	S08°58'06"W	430.00	63.92	63.86
C96	8°20'05"	S00°32'34"W	430.00	62.55	62.50
C97	69°33'07"	N31°09'05"E	45.00	54.63	51.33
C98	13°18'52"	N03°01'57"E	105.00	24.40	24.34
C99	24°48'15"	N22°05'30"E	105.00	45.46	45.10
C100	24°46'25"	N46°52'50"E	105.00	45.40	45.05
C101	6°39'35"	N62°35'50"E	105.00	12.20	12.20
C102	17°20'23"	N74°35'58"E	155.01	46.91	46.74
C103	18°31'50"	S87°27'54"E	155.01	50.13	49.91
C104	18°34'47"	S68°54'36"E	155.01	50.27	50.05
C105	18°37'27"	S50°18'29"E	155.01	50.39	50.16
C106	18°28'49"	S31°45'21"E	155.01	50.00	49.78
C107	18°18'32"	S13°21'40"E	155.01	49.53	49.32
C108	110°27'01"	S58°18'13"E	95.02	178.19	153.20
C109	2°02'22"	N66°57'06"E	95.02	3.38	3.38

NOTES
SHEETS 1&2

THIS SURVEY WAS DONE AUG 2008 BY
STAR SURVEY INC.
702 EDGEFIELD RD. NORTH AUGUSTA, SC 29841
TELEPHONE (803) 613-0377
AND RECORDED IN THE PENDER COUNTY REGISTER OF DEEDS IN MAP BOOK 48 PAGE 77 ON 4 PAGES.

THIS MAP OF REVISION IS NOT MEANT TO MOVE ANY PROPERTY LINES AND IS TO REFLECT A CHANGE IN LOCATION OF THE SIDEWALKS AND ADD AN EASEMENT TO THE TOWN OF BURGAW FOR A SIDEWALK ALONG SOUTH WALKER STREET.

SHEET 3

THE SURVEY OF SHEET 3 WAS DONE JULY, 2011
BY J.F. JOHNSON SURVEYING PLLC
AND IS A SURVEY OF EXISTING PROPERTY CORNERS
SET BY STAR SURVEYING AND MATCHES THE PROPOSED SUBDIVISION MAP SUBMITTED TO THE TOWN.

SUBDIVISION TOTAL AREA = 42.254 AC±

THIS PROPERTY MAY BE SUBJECT TO ANY EASEMENT OR RIGHT-OF-WAY.
#5 REBAR SET AT CORNERS AS NOTED.
RAW ERROR OF CLOSURE IS 1:10,000.
AREA COMPUTED BY COORDINATE METHOD.
SUBJECT TRACT DEED REFRENCE: DB 3885,PG 1; DB 2798 PG 302; MB 40 PG 81; MB 48 PG 77.

THIS PLAT WAS PREPARED WITHOUT THE BENIFIT OF A TITLE REPORT.

MINIMUM BUILDING SETBACK REQUIREMENTS:
FRONT= 25'
SIDE= 10' PER VARIANCE GRANTED BY BOARD OF ADJUSTMENT (APRIL, 2006)
REAR= 10'

I (we) hereby certify that I am (we are) the owner(s) of the property shown and described hereon, Which is located in the subdivision jurisdiction of the Town of Burgaw and that I (we) hereby adopt this plan of subdivision with my (our) free consent, establish minimum building setback lines, and dedicate all streets, alleys, walks, parks, open space, and other sites and easements to public or private use as noted. furthermore, I (we) hereby dedicate all sanitary sewer, storm sewer, and water lines to the Town of Burgaw.

Owner — 1-5-12 Date

Certificate of Approval for Recording

I hereby certify that the subdivision plat shown hereon has been found to comply with the subdivision regulations of the Town of Burgaw, North Carolina, and that this plat has been approved by the board of commissioners for recording in the Office of the Register of Deeds of Pender County.

Howard N. Walker, Jr.
(Town of Burgaw Mayor Pro Tem) — 1-3-12 Date

SURVEYOR'S CERTIFICATION

I,Hans L Lonander, certify that this plat was drawn under my supervision from an actual survey made under my supervision (deed description recorded in DB 3885 PG 1; That the boundaries not surveyed are clearly indicated as drawn from information found in MapBook 48, Page 77;That the ratio of precision as calculated is 1:10,000 ; That this plat was prepared inaccordance with G.S. 47-30 as amended. Witness my original signature, registration number and seal this 12th day of Dec, AD., 2011

NORTH CAROLINA PROFESSIONAL SEAL L-4736 LAND SURVEYOR HANS L. LONANDER

Hans L Lonander, PLS
L-4736

B0053 P0044 01-19-2012 11:03:24.000
Pender County, NC Register of Deeds Faye Teachey Prevatte PLR1 page 4 of 4

Owners: PENDER CREEKSIDE, LLC,
6740 Netherlands Drive,
Wilmington NC, 28403

REVISION DATE: NOV 11, 2011
REVISION DATE: AUG 1, 2011
REVISION DATE: MAY 24, 2011

DATE: AUGUST 18, 2008
PROJ. # 306038180
SURVEY:# 06030201A636-A
NOT TO SCALE

CERTIFICATE OF REGISTRATION BY THE REGISTER OF DEEDS
STATE OF NORTH CAROLINA
PENDER COUNTY

SURVEYOR'S CERTIFICATION

I, HANS L LONANDER, PLS CERTIFY THAT THIS PLAT IS A SURVEY THAT CREATES A SUBDIVISION OF LAND WITHIN THE AREA OF A COUNTY OR MUNICIPALITY THAT HAS AN ORDINANCE THAT REGULATES PARCELS OF LAND;

HANS L LONANDER, PLS
L-4736 NORTH CAROLINA

AREA NOTES
SUBDIVISION TOTAL AREA = 42.254 AC±/1,840,584 SQFT±
COMMON AREAS
COMMON AREA 1 = 0.953 AC±/41,494 SQFT±
COMMON AREA 2 = 2.320 AC±/101,055 SQFT±
COMMON AREA 3 = 0.061 AC±/2,677 SQFT±
COMMON AREA 4 = 2.991 AC±/130,279 SQFT±
COMMON AREA 5 = 0.268 AC±/11,678 SQFT±
COMMON AREA 6 = 0.335 AC±/14,586 SQFT±
COMMON AREA 7 = 2.254 AC±/98,190 SQFT±
COMMON AREA TOTAL = 9.182 AC±/399,959 SQFT±
100% OF COMMON AREA FOR SUBDIVISION

LOT INFO
TOTAL NUBER OF LOTS = 110

SMALLEST LOT = LOT 82-0.174 AC±/7,575 SQFT±
LARGEST LOT = LOT 6-0.659 AC±/28,698 SQFT±

STORM DRAIN EASEMENTS
ALL STORM DRAINAGE EASEMENTS SHOWN HEREON ARE 10'EACH SIDE OF INSTALLED PIPE.

WETLAND LOCATION
THE LOCATION OF THE WETLANDS AREA AS SHOWN HEREON IS BASED ENTIRELY ON INFORMATION OBTAINED FROM WETLANDS SURVEY, WHITE & JOHNSON TRACTS, BY HANOVER DESIGN SERVICES, P.A. DATED SEPTEMBER 20, 2005, AND HAS NOT BEEN FIELD VARIFIED BY THE STAR SURVEY OR THE J.F.JOHNSON SURVEY.

TIE NOTE
THE SUBJECT PROPERTY IS NOT WITHIN 2000' OF AN EXISTING USGS OR NCGS MONUMENT.

FLOOD NOTE
PER FEMA FLOOD INSURANCE RATE MAP NO. 3720322900J AND 3720322800J WITH AN EFFECTIVE DATE OF 2/16/2007 THIS SITE IS IN A ZONE X.

REVIEW OFFICER CERTIFICATION

State of North Carolina
County of Pender
Town of Burgaw

I, Rebekah Costin, Review Officer of Town of Buraw, certify that the map or plat to which this certification is affixed meets all statutory requirements for recording.

Review Officer — 12-13-2011 Date

SHEET 4 OF 4

J.F. Johnson Surveying
201A S. Wright St.
BURGAW, NC
910-259-2005
Firm License # P-0414